CHAPTER 19.4: OVERLAYS

19.4.1. GENERAL PURPOSE AND INTENT

The overlays contained in this chapter are intended to apply in combination with the underlying base zoning district to impose regulations and standards in addition to those required by the base district.

19.4.2. ESTABLISHMENT OF OVERLAYS

A. OVERLAYS ESTABLISHED

Table 19.4.2-1 sets out the overlays used in this Code.

TABLE 19.4.2-1: OVERLAYS ESTABLISHED

OVERLAY ABBREVIATION	OVERLAY NAME
AE	Airport Environs
MP	Master Plan
PUD	Planned Unit Development
G	Gaming Enterprise
RD	Redevelopment
H	Hillside
SL	Sensitive Lands
RN	Rural Neighborhood

B. RELATIONSHIP WITH BASE ZONING DISTRICTS

1. Where lands are classified within an overlay in addition to an underlying base zoning district, the regulations governing development in the overlay shall apply in addition to the regulations governing development in the underlying base zoning district.

2. In the event of an express conflict between the standards of a base zoning district and overlay standards, the standards in the overlay shall apply.

3. Overlays are established in accordance with the procedure described in Section 19.6.4.C, Rezonings.

4. In cases where lands are classified into multiple overlays and there is a conflict between the overlay standards, the most restrictive standard shall apply.

19.4.3. AIRPORT ENVIRONS OVERLAY (AE)

A. PURPOSE

The specific purpose of the Airport Environs Overlay (AE) is to ensure land use compatibility around McCarran International and Henderson Executive Airports and to provide for the safe operation of aircraft by controlling height limits.

B. APPLICABILITY

The AE shall include all noise and hazard exposure zones of 60 Ldn (day-night average sound level) and greater.

C. ZONING MAP DESIGNATION

Each AE overlay shall be shown on the zoning map by adding a symbol to indicate the overlay zoning and shall be shown in written form by adding a designator "-AE" to the base district designation. The creation of and subsequent amendment to any AE overlay shall not take effect until the City's zoning map is amended in accordance with Section 19.6.4.C.

The boundaries of the Noise Zones are as designated on the City's Airport Environs Noise Zones Map.

D. USE STANDARDS IN AE OVERLAY

Land use regulations shall be those of the base district within which the Airport Environs is combined, subject to the restrictions set forth in Table 19.4.3-1, *Land Use Compatibility in the AE Overlay*.

TABLE 19.4.3-1: LAND USE COMPATIBILITY IN THE AE OVERLAY

(SEE KEY AT END OF TABLE FOR SYMBOL INTERPRETATION)

PRIMARY USE	SPECIFIC USE TYPE		RISK ZONES AND NOISE ZONES IN 60 OR GREATER LDN						
		RPA AE-RPZ	APZ-1 AE-I	APZ-2 AE-II	60-65 AE-60	65-70 AE-65	70-75 AE-70	75-80 AE-75	80+ AE-80
Undetermined	An Undetermined Use	(*)	(*)	(*)	(*)	(*)	(*)	(*)	(*)
Nonresidential	Unspecified Accessory Use	(*)	(*)	(*)	(*)	(*)	(*)	(*)	(*)
Residential	Unspecified Accessory Use	(*)	(*)	(*)	(*)	(*)	(*)	(*)	(*)
	Accessory Use to Residential (≥2 Du/ac)	No	No	No	25	25	(No)	<No>	<No>
	Single-Family (≥2 Du/ac)	No	No	No	25	25	(No)	<No>	<No>
	Accessory Use to Residential (≤2 Du/ac)	No	No	Yes	25	25	30	<No>	<No>
	Single-Family (≤2 Du/ac)	No	No	Yes	25	25	30	<No>	<No>
	Two-Family	No	No	No	25	25	(No)	<No>	<No>
	Multifamily Structures	No	No	No	25	25	(No)	<No>	<No>
	Group Quarters	No	No	No	25	25	(No)	<No>	<No>
	Permanent Mobile Home Parks-Courts	No	No	No	25	25	(No)	<No>	<No>
	Transient Mobile Home Parks-Courts	No	No	No	Yes	Yes	(No)	<No>	<No>
	Hotels, Motels & Tourist Courts	No	No	No	Yes	25	30	35	<No>
	Other Residential	No	No	No	25	25	(No)	<No>	<No>
Manufacturing	Food & Kindred Products	No	No	(Yes)	Yes	Yes	(25)	(30)	(35)
	Textile Mill Products	No	No	No	Yes	Yes	(25)	(30)	(35)
	Apparel & Finished Products	No	No	No	Yes	Yes	(25)	(30)	(35)
	Lumber & Wood Products (Except Furn)	No	(Yes)	(Yes)	Yes	Yes	(25)	(30)	(35)
	Furniture & Fixtures	No	(Yes)	(Yes)	Yes	Yes	(25)	(30)	(35)

TABLE 19.4.3-1: LAND USE COMPATIBILITY IN THE AE OVERLAY
(SEE KEY AT END OF TABLE FOR SYMBOL INTERPRETATION)

PRIMARY USE	SPECIFIC USE TYPE		RISK ZONES AND NOISE ZONES IN 60 OR GREATER LDN						
		RPA AE-RPZ	APZ-1 AE-I	APZ-2 AE-II	60-65 AE-60	65-70 AE-65	70-75 AE-70	75-80 AE-75	80+ AE-80
	Paper & Allied Products	No	(Yes)	(Yes)	Yes	Yes	(25)	(30)	(35)
	Printing-Publishing	No	(Yes)	(Yes)	Yes	Yes	(25)	(30)	(35)
	Chemicals & Allied Products	No	No	No	Yes	Yes	(25)	(30)	(35)
	Petroleum Refining & Related Industries	No	No	No	Yes	Yes	(25)	(30)	(35)
	Rubber & Miscellaneous Plastic	No	No	No	Yes	Yes	(25)	(30)	(35)
	Stone, Clay & Glass Products	No	(Yes)	(Yes)	Yes	Yes	(25)	(30)	(35)
	Primary Metal Industries	No	(Yes)	(Yes)	Yes	Yes	(25)	(30)	(35)
	Fabricated Metal Products	No	(Yes)	(Yes)	Yes	Yes	(25)	(30)	(35)
	Instruments & Optical Goods	No	No	No	Yes	25	30	No	No
	Miscellaneous Manufacturing	No	(Yes)	(Yes)	Yes	Yes	(25)	(30)	(35)
Trans. & Utilities	Railroad, Rapid Rail & Street Railway	No	(Yes)	Yes	Yes	Yes	Yes	Yes	Yes
	Motor Vehicle Transportation	No	(Yes)	Yes	Yes	Yes	(25)	(30)	(35)
	Aircraft Transportation	No	(Yes)	Yes	Yes	Yes	(25)	(30)	(35)
	Highway & Street R-O-W	(Yes)	(Yes)	Yes	Yes	Yes	Yes	Yes	Yes
	Auto Parking	(Yes)	(Yes)	Yes	Yes	Yes	Yes	Yes	Yes
	Communications	(Yes)	(Yes)	Yes	Yes	Yes	(25)	(30)	(35)
	Utilities	(Yes)	(Yes)	Yes	Yes	Yes	Yes	Yes	Yes
	Other Trans.-Comm. & Utilities	(Yes)	(Yes)	Yes	Yes	Yes	Yes	Yes	Yes
Trade	Wholesale Trade	No	Yes	Yes	Yes	Yes	(25)	(30)	(35)
	Building Materials & Hardware (Retail)	No	Yes	Yes	Yes	Yes	(25)	(30)	(35)
	General Merchandise (Retail)	No	No	Yes	Yes	Yes	25	30	35
	Food-Retail	No	No	Yes	Yes	Yes	25	30	35
	Automotive, Marine & Aircraft Access.	No	Yes	Yes	Yes	Yes	25	30	35
	Apparel & Accessories (Retail)	No	No	Yes	Yes	Yes	25	30	35
	Furniture & Home Furnishings (Retail)	No	No	Yes	Yes	Yes	25	30	35
	Eating & Drinking Places	No	No	No	Yes	Yes	25	30	35
	Other Retail Trade	No	No	Yes	Yes	Yes	25	30	35
Services	Finance, Insurance & Real Estate	No	No	<Yes>	Yes	Yes	25	30	35
	Personal Services	No	No	<Yes>	Yes	Yes	25	30	35
	Cemeteries	<Yes>	<Yes>	<Yes>	Yes	Yes	(25)	(30)	(35)
	Business Services	No	No	<Yes>	Yes	Yes	25	30	35
	Warehousing & Storage Services	No	Yes	Yes	Yes	Yes	(25)	(30)	(35)
	Explosives Storage	No	No	No	Yes	Yes	(25)	(30)	(35)
	Repair Storage	No	<Yes>	<Yes>	<Yes>	<Yes>	(25)	(30)	(35)
	Medical & Other Health Services	No	No	No	Yes	25	30	No	No
	Legal Services	No	No	<Yes>	Yes	Yes	25	30	35
	Other Professional Services	No	No	<Yes>	Yes	Yes	25	30	35
	Contract Construction Services	No	<Yes>	<Yes>	Yes	Yes	(25)	(30)	(35)
	Government Services	No	No	<Yes>	Yes	Yes	25	30	35

TABLE 19.4.3-1: LAND USE COMPATIBILITY IN THE AE OVERLAY

(SEE KEY AT END OF TABLE FOR SYMBOL INTERPRETATION)

PRIMARY USE	SPECIFIC USE TYPE		RISK ZONES AND NOISE ZONES IN 60 OR GREATER LDN						
		RPA AE-RPZ	APZ-1 AE-I	APZ-2 AE-II	60-65 AE-60	65-70 AE-65	70-75 AE-70	75-80 AE-75	80+ AE-80
	Educational Services	No	No	No	Yes	25	30	No	No
	Religious Activities	No	No	No	Yes	25	30	No	No
	Other Miscellaneous Services	No	No	<Yes>	Yes	Yes	25	30	35
Recreation	Cultural Activities	No	No	No	Yes	25	30	No	No
	Nature Exhibitions	No	(Yes)	(Yes)	Yes	Yes	No	No	no
	Outdoor Entertainment Assembly	No	No	No	Yes	No	No	No	No
	Indoor Entertainment Assembly	No	No	No	Yes	25	30	No	No
	Outdoor Sports Assembly	No	No	No	Yes	Yes	Yes	No	No
	Indoor Sports Assembly	No	No	No	Yes	Yes	25	30	35
	Miscellaneous Public Assembly	No	No	No	(Yes)	(25)	(30)	No	No
	Fairgrounds & Amusement Parks	No	No	No	Yes	Yes	Yes	No	No
	Outdoor Amusements	No	No	(Yes)	Yes	Yes	Yes	No	No
	Indoor Amusements	No	No	(Yes)	Yes	Yes	25	30	35
	Outdoor Sports Activities	No	(Yes)	(Yes)	Yes	Yes	Yes	No	No
	Indoor Sports Activities	No	No	(Yes)	(Yes)	(Yes)	25	30	35
	Outdoor Playground & Athletic Areas	No	No	(Yes)	Yes	Yes	Yes	No	No
	Indoor Playground & Athletic Areas	No	No	(Yes)	(Yes)	(Yes)	25	30	35
	Golf Courses, Riding Stables & Water Rec.	No	Yes	(Yes)	Yes	Yes	(25)	(30)	(35)
	Other Recreation	No	Yes	(Yes)	Yes	Yes	Yes	No	No
	Resorts & Group Camps	No	No	No	Yes	Yes	Yes	No	No
	Parks	No	Yes	Yes	Yes	(25)	(30)	(35)	No
Resources	Dairy Farm	No	Yes	Yes	Yes	(25)	(30)	(35)	No
	Livestock Farms & Ranches (2)	No	Yes	Yes	Yes	(25)	(30)	(35)	No
	Other Agriculture (3)	Yes	Yes	Yes	Yes	(25)	(30)	(35)	(35)
	Agricultural-Related Activities (2)	No	Yes	Yes	Yes	(25)	(30)	(35)	No
	Forestry Activities & Related Services	No	Yes	Yes	Yes	(25)	(30)	(35)	(35)
	Fishing Activities & Related Services (3)	No	Yes	Yes	Yes	Yes	Yes	Yes	Yes
	Mining Activities & Related Services	No	Yes	Yes	Yes	Yes	Yes	Yes	Yes
Undeveloped	Undeveloped & Unused Land	Yes	Yes	Yes	Yes	Yes	Yes	Yes	Yes
	Water Areas (3)	Yes	Yes	Yes	Yes	Yes	Yes	Yes	Yes
	Open Space	Yes	Yes	Yes	Yes	Yes	Yes	Yes	Yes

KEY FOR TABLE 19.4.3-1:

(*)	previously undetermined or undefined uses will be reviewed by City staff and assigned appropriate restrictions.
Yes	land use and related structures allowed without restrictions.
No	land use and related structures are not compatible and are not allowed.
(No)	where the provisions of the AE overlay permit uses but require noise attenuated construction in buildings and structures, a minimum exterior to interior noise level reduction of 35 decibels must be incorporated into building construction.
<No>	where the provisions of the AE overlay permit uses but require noise attenuated construction in buildings and structures, a minimum exterior to interior noise level reduction of 35 decibels must be incorporated into building construction.
25	requires a minimum exterior to interior noise level reduction of 25 decibels incorporated into building construction.
30	requires a minimum exterior to interior noise level reduction of 30 decibels incorporated into building construction.
35	requires a minimum exterior to interior noise level reduction of 35 decibels incorporated into building construction.
(25)	a minimum exterior to interior noise level reduction of 25 decibels must be incorporated into construction of portions of buildings where public is received, office areas, noise sensitive areas, or where the normal noise level is low.
(30)	a minimum exterior to interior noise level reduction of 30 decibels must be incorporated into construction of portions of buildings where public is received, office areas, noise sensitive areas, or where the normal noise level is low.
(35)	a minimum exterior to interior noise level reduction of 35 decibels must be incorporated into construction of portions of buildings where public is received, office areas, noise sensitive areas, or where the normal noise level is low.
(Yes) (mfg)	conditional use permit required; additional factors to be considered: labor intensity, structural manufacturing coverage, explosive characteristics, air pollution, size of establishment, people density, peak period (including shoppers/visitors) concentrations.
(Yes)	no structures in clear zones. No passenger terminals and no major aboveground transmission lines unless allowed by the FAA.
(Trans/Utils)	Trans./Utils. in runway protection zones or APZ I.
<Yes>	(services) conditional use permit required: low-intensity office use only (limited scale of concentration of services of such uses). Meeting places (including chapels), auditoriums, etc. not allowed.
(Yes)	(Recreation) conditional use permit required: facilities must be low intensity.
(1)	"Other agriculture" includes livestock grazing but excludes feedlots and intensive animal husbandry.
(2)	"Livestock farms and ranches" and "agricultural related activities" includes feedlots and intensive animal husbandry.
(3)	"Fishing activities & related services" and "water areas" include hunting and fishing.
≤	less than or equal to.
≥	greater than or equal to.

E. OVERLAY-SPECIFIC STANDARDS

1. No use may be made of land that would create electrical interference with radio communication between the airport and the aircraft, make it difficult for flyers to distinguish between airport lights and others, result in glare, impair visibility, or otherwise interfere with or endanger the landing, taking off, or maneuvering of aircraft.

2. Exterior to interior noise level reduction (a minimum of 30 decibels for AE-60 and a minimum of 35 decibels for AE-65) is required where habitable space is greater than 35 feet in height.

3. Noise disclosure is required for all new residential developments or units and condominium conversions within the Airport Environs Overlay District. This disclosure includes:

(a) A form recorded against the land by the applicant, with copies provided to the City of Henderson and the Clark County Department of Aviation;

(b) A copy of the recorded form must be presented to the initial occupant;

(c) The recorded noise disclosure form should include a map, obtained by the applicant from the Clark County Department of Aviation, highlighting the project location in relation to associated flight tracks.

F. NOISE LEVEL REDUCTION STANDARDS

The noise level reduction standards in Henderson Municipal Code Chapter 15.56 shall be used to meet the corresponding interior noise level reduction requirements of Table 19.4.3-1.

G. NOTIFICATION OF AIRPORT AUTHORITY

Except for alterations and additions to residential uses, the City shall notify the Airport Authority of applications and provide necessary exhibits for any new or expanded uses or developments within an AE.

19.4.4. MASTER PLAN DEVELOPMENT OVERLAY (MP)

A. PURPOSE

In addition to the general purposes of this Code in Section 19.1.5, the specific purposes of the Master Plan Development Overlay (MP) are to:

1. Ensure orderly planning for the development of large, unsubdivided parcels of the city within limited service areas, and in other developing areas, consistent with the Comprehensive Plan;

2. Maintain an environmental equilibrium consistent with existing vegetation, soils, geology, topography, and drainage patterns, and protect sensitive natural resources;

3. Avoid premature or inappropriate development that would result in incompatible uses or create public service demands or traffic exceeding the capacity of existing or planned facilities;

4. Encourage innovative and sensitive site planning and design with high levels of landscaping and other site amenities;

5. Ensure adequate provision of open space, recreational facilities, and other community amenities;

6. Encourage high-quality structures in terms of design, materials, and layout;

7. Ensure that transportation links are maintained and enhanced with adjacent developments and other areas in the city; and

8. Accommodate neo-traditional (Traditional Neighborhood Development) designs.

B. APPLICABILITY AND ZONING MAP DESIGNATOR

1. The MP overlay may be combined with any base district and applied to an area at least 50 acres in size, unless otherwise approved by the City Council.

2. Each MP overlay shall be shown on the zoning map by adding a symbol to indicate the overlay zoning and shall be shown in written form by adding an "-MP" designator to the base district designation.

C. INITIATION

1. The MP overlay may be initiated by the City Council or the Planning Commission or by a petition of property owners under the procedures established for zoning map amendments to the MP overlay in Section 19.6.4.D.

2. If the property proposed for a MP is not under a single ownership and all owners agree to the proposed development, then all owners must join the application, and a map showing the extent of ownership must be submitted with the application.

3. Applications to amend zoning or conditions that are part of an approved MP shall be initiated by the master developer. If there is no master developer with an interest remaining at the time of the amendment, then the authorized representatives of the homeowner's or property owner's association, the owner of the property in question, or the City of Henderson may initiate an application.

D. REQUIRED PLANS AND MATERIALS

Each MP master development plan shall set forth a land use and circulation system concept that is consistent with the traffic-carrying capacity of surrounding streets, compatible with the environment, and capable of being served by existing and planned public facilities and utilities. Submittal requirements and exhibits shall be the same as for a planned unit development application, except that a tentative map (Section 19.6.5.D) shall only be required for an accompanying subdivision or planned unit development.

E. APPROVAL OF A MASTER DEVELOPMENT PLAN

1. General Procedures

The review and approval procedures for a master development plan are set out in Section 19.6.4.D.

2. Required Findings

In order to approve a master development plan, the City Council must make the same findings as are required for a planned unit development (Section 19.6.4.D).

F. LAND USE REGULATIONS

Land use regulations shall be those of the base zoning district within which the MP overlay is combined provided that no new or expanded use may be approved unless a master development plan has been approved. To promote mixed-use developments, commercial and residential uses may be combined in any plan, site or building.

G. DEVELOPMENT REGULATIONS

Unless expressly modified in an approved master development plan, the otherwise applicable regulations of this Development Code shall apply within a MP overlay, including the use, intensity, and dimensional standards of the underlying zoning district; the general development regulations; and the subdivision design and improvement standards. A development standards document is required for all proposals with modifications to Development Code regulations, and for all proposals in the MR district. No land division in an area subject to an MP shall be permitted without an approved master development plan. The Planning Commission may recommend and the City Council approve a master development plan including lots smaller than those required by the base district. Restrictions on the number of dwelling units permitted shall be recorded with a subdivision map or prior to issuance of a grading permit.

H. AMENDMENTS TO ADOPTED MASTER DEVELOPMENT PLAN

Amendments to adopted master development plans shall be processed as zoning map amendments, in accordance with the procedures of Section 19.6.4.D.

I. DEVELOPMENT PLAN REVIEW

Plans shall be accepted for design review under Section 19.6.6.B only if they are consistent with an approved master development plan, a master sign plan (if required), and with all other applicable requirements of this Development Code.

J. PARK ACREAGE

Park acreage shall be provided at a minimum of 5.5 acres per 1,000 residents in every MP overlay.

19.4.5. PLANNED UNIT DEVELOPMENT OVERLAY (PUD)

A. PURPOSE

The Planned Unit Development Overlay (PUD is intended to encourage innovative land planning and site design concepts that achieve a high level of environmental sensitivity, energy efficiency, aesthetics, high-quality development, and other community goals by:

1. Reducing or eliminating the inflexibility that sometimes results from strict application of zoning standards that were designed primarily for individual lots;

2. Allowing greater freedom in selecting the means to provide access, light, open space, and design amenities;

3. Promoting quality urban design and environmentally sensitive development by allowing development to take advantage of special site characteristics, locations, and land uses;

4. Requiring compliance with development standards that reflect the high level of public investment in adjoining lands; and

5. Accommodating neo-traditional (Traditional Neighborhood Development) designs.

B. DEVELOPER'S STATEMENT OF INTENT

Each application for approval of a planned unit development shall include a statement by the applicant describing how the proposed development departs from the otherwise applicable standards of this Development Code and how the proposed development, on balance, is an improvement over what would be required under otherwise applicable development regulations.

C. REVIEW AND APPROVAL PROCEDURES

The review and approval procedures for planned unit developments are set out in Section 19.6.4.D.

D. STANDARDS OF GENERAL APPLICABILITY

The standards of this subsection shall apply to all planned unit developments unless otherwise expressly provided.

1. Allowed Uses

(a) Residential Planned Unit Developments

(b) The following uses may be allowed if approved as part of a planned unit development that is located in a residential base zoning district, so long as the use is permitted in the underlying base district:

(1) Detached and attached single-family homes (including mobile and modular homes in trailer estates).

(2) Multifamily residences, including multi-story residential structures.

(3) Day care, including limited, large-family, and general facilities.

(4) Religious assembly.

(5) Accessory buildings and structures.

(6) Circulation and parking facilities including lots and garages supporting the planned unit development.

(7) Signs including public and private street identification signs.

(8) Streetlighting and street furniture.

(9) Underground utilities.

(10) Other residential and supporting uses expressly approved as part of the planned unit development.

(c) Nonresidential Planned Unit Developments

Only uses permitted in the underlying base zoning district shall be allowed in planned unit developments that are located in nonresidential base zoning districts.

2. Size

There shall be no minimum or maximum size requirement for planned unit developments.

3. Density

The maximum residential density permitted within a planned unit development shall be that of the zoning district in which the planned unit development is located.

4. Development Standards and Modifications

Unless otherwise expressly allowed by this section and approved by the City Council during the PUD approval process, planned unit developments shall be subject to all applicable standards of this Development Code, including those of the underlying base zoning district. In order to approve modifications of otherwise applicable standards, the City Council must find that:

(a) Deviations from applicable base district or subdivision design standards that otherwise would apply are justified by compensating benefits of the planned unit development that are provided in accordance with Section 19.7.11, Compensating Public Benefits.

(b) The planned unit development includes adequate provisions for utility services and emergency vehicle access.

5. Setbacks

Setbacks shall be provided in accordance with the underlying zoning district standards unless another minimum setback is expressly approved as part of the planned unit development approval.

6. Signs

Unless otherwise expressly provided in this Development Code, planned unit developments shall be subject to the sign regulations of Section 19.6.7.

7. Landscaping

Unless otherwise expressly provided in this Development Code, planned unit developments shall be subject to the landscaping and buffer regulations of Section 19.7.5, *Landscaping and Screening*.

8. Parking

Planned unit developments shall be subject to the off-street parking and loading standards of this Development Code.

9. Common Open Space

(a) Minimum Requirements

All planned unit developments that include residential dwelling units shall provide common open space in accordance with Section 19.7.2, *Common Open Space*.

(b) Management

A planned unit development that includes common open space shall be subject to NRS 278A.130 to 278A.190, inclusive.

10. Compliance with Zoning District Standards

Unless otherwise specified in the approval of the planned unit development, once initial construction is complete, all subsequent development and construction shall be governed by the underlying zoning district regulations unless otherwise specified in the original approval.

19.4.6. GAMING ENTERPRISE OVERLAY (G)

A. PURPOSE

The Gaming Enterprise Overlay (G) is intended to comply with Chapter 463 of NRS, as amended, by seeking to ensure adequate roads, water, sanitation, utilities, and related services to areas where nonrestricted gaming establishments are proposed. Such establishments shall enhance, expand, and stabilize employment and the local economy. Such establishments shall not unduly impact public services, consumption of natural resources, or the quality of life enjoyed by the residents of surrounding neighborhoods. Such establishments shall not be detrimental to the health, safety, or general welfare of the community or be incompatible with the surrounding area.

B. APPLICABILITY AND ZONING MAP DESIGNATOR

1. The restrictions of this section apply to all lands and businesses within the City of Henderson except:

(a) An establishment that holds a nonrestricted license for a resort hotel on December 31, 2002.

(b) A proposed establishment located entirely within the boundary line of a master-planned community of 125 acres or more if, before June 28, 1997, the master-

planned community was initially approved by the local governing body having jurisdiction over the master-planned community and was, in whole or in part, zoned for gaming or designated a Gaming Enterprise district.

2. If the City has established one or more Gaming Enterprise districts, the City shall make available for public inspection a map that shows the location of each Gaming Enterprise district.

(a) The City shall update the map at least once every four months.

(b) The map is a public record that is subject to the provisions of Chapter 239 of NRS.

C. LAND USE REGULATIONS

Land use regulations shall be those of the base district with which the G district is combined providing, however, that no new or expanded casinos with nonrestricted gaming shall be approved unless they meet the conditional use permit and hotel room requirements of this Code and the restrictions of HMC Chapter 4.32.

D. PROPERTY DEVELOPMENT REGULATIONS

Property development regulations shall be those of the base district with which the G overlay is combined unless modified by an approved development plan. Unless otherwise expressly stipulated, no waivers within this section shall be permitted.

E. INITIATION

An application to approve a G overlay shall be initiated by a property owner or authorized agent, or by the City. If the property is not under a single ownership, all owners shall join the application, and a map showing the extent of ownership shall be submitted with the application, if applicable.

F. REQUIRED PLANS AND MATERIALS

A property owner or other authorized agency shall initiate an application for a G overlay by filing a complete application with the Community Development Director that shall contain the following:

1. A completed application form.

2. A vicinity map showing the location and street address of the subject property and showing all residential, commercial, industrial, and public uses and zoning districts within 7,500 feet of all boundaries of the subject property.

3. A concept plan indicating the existing and proposed uses, approximate gross floor area, building coverage, height, parking, and density.

4. A circulation plan showing proposed streets and the relation to the master plan for streets and highways.

5. An analysis of any adverse impacts upon surrounding properties and proposed mitigation methods including, but not limited to, construction traffic, noise and other construction-related impacts, post-construction traffic, parking, signage, lighting, and any other impacts associated with the casino operation.

6. A preliminary development schedule indicating phases and the sequence and timing of development.

7. A plan for extension of public facilities, services, and utilities and for flood control and drainage.

8. The required application fee.

9. Proof of compliance with findings in Section 19.4.6.G.

G. PROCEDURE FOR APPROVAL OF GAMING ENTERPRISE OVERLAY DISTRICT--GROUNDS FOR DENIAL--REAPPLICATION

1. Notice

Notice shall be given in accordance with Nevada Revised Statutes and as set forth below.

(a) If a person is proposing to operate an establishment with a nonrestricted license and the location of the proposed establishment has not been designated a G overlay pursuant to this section, the person may petition the City to designate the location of the proposed establishment a G overlay as set forth below.

(b) If a person files an application to designate the location of a proposed establishment a G overlay, the City shall, at least ten days before the date of the hearing of the application, mail a notice of the hearing to:

(c) Each owner of real property whose property line is less than 5,000 feet from the property line of the proposed establishment.

(d) Each tenant of a mobile home park whose property line is less than 5,000 feet from the property line of the proposed establishment.

(e) Any advisory board that represents one or more owners of recreational vehicle property or tenants of a mobile home park whose property line is less than 5,000 feet of the property line of the proposed establishment.

(f) The notice must be written in language that is easy to understand and must set forth the date, time, place, and purpose of the hearing and contain a physical description or map of the location of the proposed establishment. The applicant shall pay the costs of providing the notice that is required by this section.

2. Public Hearing

Any interested person is entitled to a public hearing. The Planning Commission shall conduct a public hearing and hear testimony for and against the application. A public hearing may be continued to a definite date.

3. Decision and Notice

Following close of the public hearing, the Planning Commission shall recommend approval, conditional approval, or denial of the application. The City Council shall affirm, deny, or modify the Planning Commission's recommendation at its next regularly scheduled meeting. An affirmative vote of ¾ of the City Council shall be required to approve the addition of a G overlay designation to any district.

4. Limits on Conditions of Approval

No conditions of approval of a G overlay shall include use, height, bulk, density, open space, parking, loading, or sign requirements that are less restrictive than those prescribed by applicable base district regulations, unless specifically approved by the City Council.

5. Findings

At the hearing, the applicant must prove by clear and convincing evidence that:

(a) The roads, water, sanitation, utilities, and related services to the location are adequate.

(b) The proposed establishment will not unduly impact public services, consumption of natural resources, and the quality of life enjoyed by residents of the surrounding neighborhoods.

(c) The proposed establishment will enhance, expand, and stabilize employment and the local economy.

(d) The proposed establishment will be located in an area planned or zoned for that purpose pursuant to NRS 278.010 to 278.630, inclusive.

(e) The proposed establishment will not be detrimental to the health, safety, or general welfare of the community or be incompatible with the surrounding area.

(f) On the date that the application was filed:

(1) The property line of the proposed establishment was at least 5,000 feet from the property line of a developed residential district as defined in NRS 463.3086(9)(a).

(2) The property line of the proposed establishment was at least 5,000 feet from the property line of a public school, private school, or structure used primarily for religious services or worship.

(3) The proposed establishment will not adversely affect:

i. Any developed residential district unit whose property line is within 7,500 feet of the property line of the proposed establishment.

ii. A public school, private school, or structure used primarily for religious purposes, whose property line is within 5,000 feet of the property line of the proposed establishment.

(4) The provisions of Subsections (1)-(3) above shall not apply in the event:

i. A proposed G overlay is located entirely within a Master Plan overlay district or Planned Community district of 1,000 acres or more and such Master Plan overlay district or Planned Community district or G overlay would be either:

1. Established on or before January 1, 2008; or

2. Located within a redevelopment district.

ii. An expansion is proposed of an existing G overlay in existence as of September 18, 2007.

iii. A proposed G overlay is within 1,500 feet of existing or future alignment of the centerline of Las Vegas Boulevard, as amended, contains a minimum of 25 acres, a minimum of 500 hotel rooms and meets all other criteria of a resort hotel as defined by Title 4 of the HMC.

(5) An application filed pursuant to Subsection (4) of this section shall require proof that on the date the application was filed:

i. The property line of the proposed establishment was at least 500 feet from the property line of a developed residential district.

ii. The property line of the proposed establishment was at least 1,500 feet from the property line of a public school, private school, or structure primarily for religious services or worship.

iii. The proposed establishment will not adversely affect:

1. Any developed residential district whose property line is within 2,500 feet of the property line of the proposed establishment.

2. A public school, private school, or structure used primarily for religious purposes, whose property line is within 2,500 feet of the property line of the proposed establishment.

6. Reapplication

If the City Council denies a petition submitted pursuant to this section, it shall not consider another petition concerning the same location or any portion thereof for one year after the date of the denial.

H. APPEALS

Appeals of City Council decisions on amendments to the G overlay district shall be in accordance with NRS 463.3088.

I. AMENDMENTS TO GAMING OVERLAY PLAN

Any amendment to an approved plan shall require a new application and approval in accordance with this Development Code.

J. EXPIRATION, EXTENSION, AND TRANSFER

Unless extended, an approved G overlay shall expire two years from the date of approval, with the following exceptions:

1. The project for which the G overlay was approved is diligently pursuing construction or is completed.

2. The G overlay runs with the land and automatically transfers to subsequent property owners as long as there is no change in the development plan. Except as specified in Subsections B and C of this section, any change in the approved development plan will cause the G overlay to expire.

K. DEVELOPMENT PLAN REVIEW

Following approval of a G overlay the applicant shall apply for a conditional use approval and specific development plan review. Plans for a project requiring a G overlay shall be accepted for conditional use permit and development plan review only if they are consistent with the approved development plan presented to the Planning Commission and City Council with the G overlay application and with all other applicable requirements of this Title.

19.4.7. REDEVELOPMENT OVERLAY (RD)

A. PURPOSE

1. The purpose of the Redevelopment Overlay (RD) is to ensure that redevelopment within designated areas is in accordance with all applicable Henderson Redevelopment Plans.

2. The goal of the Henderson Redevelopment Plan is to economically and culturally stabilize and enhance certain areas in Henderson. The Henderson Redevelopment Plan addresses employment, land use, circulation, open space, community facilities, regulatory controls, financing methods, and other elements necessary to achieve the adopted goal.

B. REDEVELOPMENT OVERLAY BOUNDARY

1. The RD overlay shall be the boundary of the Henderson redevelopment area, as depicted in the adopted Henderson Redevelopment Plan on the map entitled, "Redevelopment Area," and as amended from time-to-time by the City Council.

2. The zoning designation on all lands within the boundary of the Redevelopment Overlay shall include the designation "-RD."

C. REDEVELOPMENT REGULATIONS ADOPTED - AMENDMENTS

The Henderson Redevelopment Plan, including all regulations contained therein, dated October 4, 1995, and as amended from time-to-time by the City Council, is adopted. Amendments to the Redevelopment Plan shall be initiated and processed in accordance with NRS 279.

D. APPLICABILITY

1. Provisions of the RD overlay shall apply to all development within the RD boundary.

2. Except as otherwise specified in the Redevelopment Plan, allowable land uses and land use restrictions of the underlying base zoning district on all parcels within the RD shall remain in effect.

E. APPLICATION REVIEW

1. Each application for development within the RD overlay shall be subject to the redevelopment area review procedures of Section 19.6.6.C.

2. The Community Development Director shall review each request, obtain Redevelopment Agency advice when appropriate, and make written findings in accordance with provisions set forth in the Redevelopment Plan.

3. If the Community Development Director finds the proposed project to be in compliance with the Redevelopment Plan, the applicant shall then apply for design review and any other approvals required for the project under this Code.

4. If the Community Development Director does not find the project in compliance, the applicant shall either withdraw the application, redesign the project to comply or appeal the Community Development Director's decision to the Henderson Redevelopment Agency.

5. If the Redevelopment Agency upholds the applicant's appeal, the applicant shall then apply for design review and any other approvals required for the project under this Code.

F. REQUIRED PLANS AND MATERIALS

Each application submitted in accordance with requirements of this section for review by the Community Development Director shall include the same exhibits as required for a design review application (Section 19.6.6.B), as well as any additional information required by the Community Development Director for thorough review of the application.

19.4.8. HILLSIDE OVERLAY (H)

A. PURPOSE

The Hillside Overlay (H) provides for the reasonable use of hillside areas and related lands while protecting the public health, safety, and general welfare by:

1. Determining whether certain conditions exist, such as loose or easily eroded soils or rocky soils that may require blasting, and using appropriate engineering technology to ensure stable slopes during and subsequent to development.

2. Reducing water runoff, soil erosion, and rock slides by minimizing grading and by requiring re-vegetation.

3. Permitting intensity of development compatible with the natural characteristics of hillside terrain, such as degree of slope, significant landforms, soil suitability, and existing drainage patterns.

4. Preserving the scenic quality of the desert and mountain environment by identifying and considering sensitive ridgelines in development of hillside areas.

5. Reducing the physical impact of hillside development by encouraging innovative site and architectural design, minimizing grading, and requiring restoration of graded areas.

6. Providing safe and convenient vehicular access by encouraging development on the less steeply sloped terrain.

7. Promoting cost-efficient public services by encouraging development on the less steeply sloped terrain, thereby minimizing service extensions and utility costs and maximizing access for all necessary life safety services.

8. Providing specific design criteria for offsite improvements that will reduce grading and site disturbance.

9. Recognizing the unique characteristics of the hillside terrain and promoting the placement of building pads that are compatible with the hillside terrain.

B. APPLICABILITY AND ZONING MAP DESIGNATOR

1. The H overlay may be applied to any area identified on the Hillside Regulation Map.

2. Establishment of an H overlay may be initiated by the City Council, Planning Commission, or by a petition of property owners under the rezoning procedures established in Section 19.6.4.C.

3. Each H overlay shall be shown on the zoning map by adding a symbol to indicate the overlay zoning and shall be shown in written form by adding an "-H" designator to the base district designation.

4. If the 15 percent slope line covers only a portion of a parcel, then the entire parcel is subject to the H overlay.

C. HILLSIDE DEVELOPMENT PLAN REQUIRED

1. In addition to compliance with the provisions of this section, lots within the H overlay with slopes of 15 percent or greater shall also be required to prepare a Hillside Development Plan prior to applying for development approvals.

2. A slope analysis shall be prepared to determine if a parcel or lot is subject to the requirement for a Hillside Development Plan.

3. No land division or new construction shall occur on a lot in the H overlay with a slope of 15 percent or more without approval of a Hillside Development Plan.

4. A lot or parcel that will be further divided prior to development shall be subject to the Hillside Development Plan only in the areas with 15 percent slope or greater.

5. A lot or parcel with slopes of 15 percent or more that will not be further divided prior to development shall be subject to the H overlay on the entire parcel or lot.

D. HILLSIDE DEVELOPMENT PLAN REQUIREMENTS

1. Minimum Requirements

Hillside development plans shall, at a minimum, include the following information:

(a) The slope analysis;

(b) A response to the City's Hillside Checklist requirements;

(c) An Existing Conditions Report;

(d) A preliminary Hillside Restoration Plan; and

(e) A three-dimensional model (physical or electronic) that depicts the before-and-after conditions of the proposal. (The three-dimensional model does not have to be submitted with the entitlement application but must be provided at the public hearing.)

2. Existing Conditions Report

The Existing Conditions Report required in the Hillside Development Plan shall contain the following:

(a) A Native Plant Inventory prepared by a qualified revegetation company experienced in Mojave Desert restoration that contains the following:

(1) An aerial photograph with site boundaries clearly marked;

(2) Identification of four, non-adjacent, 25,000-square-foot test areas to determine average plant density for overall site;

(3) A plant list identifying plant species and number of plant species in the test area;

(4) Identification of area to be disturbed;

(5) Identification of plants to be salvaged from the disturbed area; and

(6) Identification of onsite or offsite plant nursery for salvaged materials.

(b) A photo study depicting the proposed development site prior to development. Photos should include all washes and significant topographical features as determined by site walk with staff per Section 19.4.8.E.;

(c) A preliminary grading and drainage study;

(d) Identification of desert washes; and

(e) Identification of protected ridgelines.

E. SITE MEETING REQUIRED

Prior to submittal of a hillside development application, the applicant, together with Community Development and Public Works staff members, shall conduct a meeting on the development site to discuss overall site design and constraints.

F. DEVELOPMENT REGULATIONS

The following standards shall apply within the H overlay:

1. Density Allocation and Maximum Site Disturbance

(a) For all areas of the lot or parcel with less than a 15 percent slope and outside a sensitive ridgeline, 100 percent site disturbance may occur.

(b) For areas of slope greater than 15 percent, the standards of this section shall apply. For property that is currently zoned DH-H and all residential districts with the H overlay (with the exception of RS-1-H and RS-2-H), the amounts of density and site disturbance shall be specific to the slope category in which it is located.

(c) Property currently zoned RS-2-H or RS-1-H that is proposed to be rezoned or subdivided shall be subject to the standards in this subsection.

(d) For all nonresidential districts with the H overlay, density limits shall not apply; however, the amount of site disturbance shall be specific to the slope category in which it is located.

(e) Density and site disturbance shall be determined in accordance with a slope analysis and Table 19.4.8-1, Density Allocation and Site Disturbance:

TABLE 19.4.8-1: DENSITY ALLOCATION AND SITE DISTURBANCE		
SLOPE CATEGORY (%)	**DENSITY (DU/AC)**	**MAXIMUM SITE DISTURBANCE (%)**
15-19.9	2	50
20-24.9	1	40
25-29.9	0.4	30
30-34.9	0.2	25
35 or more	0.1	15

(f) Existing lots of record that were created prior to July 1, 1997, that are currently zoned RS-2 (Single-Family Residential) district may be developed at a maximum of two dwelling units per gross acre with a maximum of 50 percent site disturbance.

(g) Existing lots currently zoned RS-1-H may be developed at a maximum of one dwelling unit per gross acre with a maximum of 50 percent site disturbance prior to subdividing.

(h) Site disturbance shall include all grading for the development of the property, but shall not include any public or private street on existing lots of record that were created prior to July 1, 1997, and zoned RS-1-H and RS-2-H.

(i) A maximum of ten percent increase in site disturbance shall be allowed for the construction of a driveway subject to staff level approval on such lots. Any increase in excess of ten percent shall be subject to Planning Commission approval.

2. Density and Site Disturbance Redistribution

Density and site disturbance may be redistributed from portions of a lot or parcel with a slope 15 percent or greater to any area of the Hillside Development Plan, regardless of slope, in accordance with the following standards:

(a) Areas from which density and site disturbance are redistributed shall be designated as natural areas in accordance with this section.

(b) Density and site disturbance shall be redistributed only within the boundaries of the Hillside Development Plan. In no case shall the gross density exceed the base zoning of the property.

(c) Density and site disturbance transfer within a master plan shall be permitted in accordance with Table 19.4.8-1, and shall be determined by a slope analysis for each planning area with slopes of 15 percent or greater.

(d) Site disturbance shall be tracked for each planning area of the hillside development submitted for review within the master plan. As each planning area is developed, the site disturbance will be tracked through the tentative map review process to ensure compliance with site disturbance limitations for the overall master plan.

3. Minimum Lot Area

The minimum lot area for parcels zoned single-family residential shall be 4,500 square feet. The minimum lot area for parcels zoned other than single-family residential shall be as required by the underlying zoning district.

4. Lot Width and Depth

(a) General

Lot width and depth of non-flag lots shall not exceed a ratio of three feet of width/depth for one foot of width/depth. Minimum lot width shall be 45 feet.

(b) Flag Lots

(1) The flagpole or panhandle portion of the lot shall be a minimum of 24 feet wide, and the depth of the flagpole or panhandle shall not exceed 150 feet as measured from the adjacent public or private street.

(2) The non-flag portion of a flag lot shall be subject to the lot width/depth ratios for non-flag lots.

(3) The flagpole or panhandle portion of the lot shall not be included in calculating lot size.

5. Setbacks, Commercial, Industrial, and Multifamily

Except for required sensitive ridgeline setbacks, commercial, industrial, and multifamily projects shall provide setbacks in accordance with the base district in which the project is located.

6. Setbacks, Single-Family Residential

(a) Minimum

Except for required sensitive ridgeline setbacks, single-family residential shall provide setbacks in accordance with Table 19.4.8-2, *Single-Family Residential Setbacks*:

TABLE 19.4.8-2: SINGLE-FAMILY RESIDENTIAL SETBACKS

SETBACK	DISTANCE (FEET)
Front	20 front entry to garage
	14 to living area
	10 to side-loaded garage
Rear	15
Corner Side	10
Side	5

(b) Adjustments

However, in order to adjust for terrain and produce the optimum building area, setbacks may be provided as follows:

(1) The aggregate total of setback dimensions around a building shall be equal to the sum of the minimum setbacks.

(2) Corner side setbacks may not be reduced.

(3) No setback, regardless of lot placement, shall be less than five feet. (For example, this Code requires an interior-side setback of five feet and a rear setback of 15 feet. Those two setbacks may be adjusted to ten-foot side and ten-foot rear.)

(4) On flag lots, the dwelling may be located five feet from any two sides, but the garage shall remain a minimum of 20 feet from the street. Interior side and rear setbacks for non-corner lots shall be the cumulative total of the setbacks, so long as a minimum of five feet is maintained from a property line.

7. Building Height

No structure shall exceed a height of 35 feet unless the structure is stepped or terraced. For the purposes of this section, a stepped or terraced building that exceeds an overall height of 35 feet must have a horizontal offset that is equal to, or greater than, the corresponding vertical height of each "step." The height of each step or terrace shall not exceed 35 feet as measured from the lowest finished grade elevation or the maximum peak roof height on the lower step to the maximum peak roof height on the upper step.

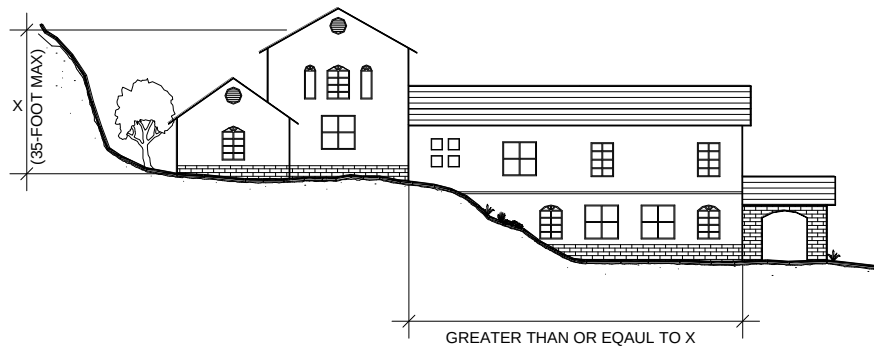

Figure 19.4.8-A: Hillside Building Height

8. Grading Standards

All development subject to the provisions of the hillside development regulations shall have a grading plan approved by the Community Development Director and Public Works Director. The review process for the grading plan shall coincide with the tentative map, planned unit development, or design review process. When none of the above are required, it will coincide with the building permit review. The grading scheme shall be shown as a separate grading plan. All development shall meet all of the following criteria:

(a) The portions of the site or lot to be graded must be clearly shown on the grading plan.

(b) The site or preliminary grading plan shall be approved by the Community Development Director and the Public Works Director prior to Planning Commission approval.

(c) Unless approved by the Public Works Director and the Community Development Director, there shall be no blasting, grubbing, grading, or clearing prior to approval of civil improvement plans and final grading plans by the Public Works Director and issuance of a grading permit by Building and Fire Safety. Blasting, grubbing, grading, and clearing are to occur only within the areas identified on the approved grading plan.

(d) A bond for restoration must be provided prior to issuance of a preliminary grading or grading permit.

(e) All portions of the site or lot to be left ungraded are to remain undisturbed areas and are not to be used for stockpiling of materials or excess fill.

(f) If natural areas are designated on a site or lot, temporary fencing shall be installed where they abut construction areas in order to prevent encroachment into the natural areas.

(g) With the exception of roadways and driveways, the maximum vertical height of a vertical cut or fill shall not exceed 35 feet, the maximum length of a vertical cut or fill shall not exceed 150 feet, and:

(1) The cut or fill shall be varnished and revegetated in accordance with the hillside development plan.

(2) The back-filled area shall be compacted per the approved grading plan and revegetated/varnished in compliance with this section.

(3) The edges of the cut or fill shall be shaped to conform with the natural topography of the land.

(h) Areas disturbed for roadways and driveways shall be varnished and/or revegetated.

(i) Prior to any cut or fill on slopes that encroach into a floodplain, the cut or fill design must first obtain the necessary floodplain approval (Certified Letter of Map Revision/Letter of Map Revision) and be approved by the Community Development Director and the Public Works Director.

(j) The grading plan shall include a statement that certifies all finished floor elevations are a maximum of 18 inches above the 100-year base flood elevation.

(k) Excess material shall be hauled to an appropriate offsite disposal area.

(l) All site restoration shall be completed within 90 days of completion of work or prior to issuance of a certificate of occupancy, whichever occurs first. If grading operations cease for more than 120 days, site restoration shall occur and shall be completed within 60 days.

9. Hillside Restoration

All cut and fill areas including public or private streets and driveways must be restored according to the following:

(a) Revegetation Plan

(1) A landscape permit must be reviewed and approved by the Community Development Department.

(2) Restored areas must include only native plant materials.

(3) Plant density must be at least 70 percent of the native density based on the native plant inventory per Section 19.4.8.D.2.

(4) A temporary watering system shall be installed, activated, and maintained until the revegetated or salvaged plant materials are established. Plant materials are considered established if they survive for one growing season after the temporary watering system is removed.

(5) Guarantee 80 percent survival rate of plant material.

i. Survival rate shall be determined when the plant materials are considered established per paragraph (a)(4). above.

ii. Responsibility for the replacement of plants to meet the 80 percent survival rate falls on the developer or their designees. Restored hillside areas shall not be turned over to a homeowners' association until it is determined that 70 percent of the native plant density has been restored and 80 percent of the plants have survived.

(6) Areas not exceeding a three-to-one slope must replicate the desert floor using the hand placement of rock, prior to application of varnish. Typical rock-mulching in restored areas is prohibited.

(7) Seeds for trees, desert shrubs, and grasses must be planted with a density adequate to control erosion and shall use one of the following methods of planting:

i. Raked into the soil with appropriate mulch materials;

ii. Hydroseeding;

iii. Anchored mulches;

iv. Established on jute, rolled straw, or similar material; or

v. Any other method approved by the Community Development Director.

(b) Revarnishing Plan

All disturbed areas to be restored must be varnished using a hue similar to the surrounding undisturbed area using an approved process.

10. Slope Stabilization

All cut and fill slopes steeper than a ratio of three-to-one or as approved by a geotechnical report, with the exception of retaining walls, shall be stabilized with properly engineered stone riprapping or sculptured rock, if necessary, as follows:

(a) Stone riprapping shall be hand-placed on the slope.

(b) The stabilizing material used shall blend with the natural appearance of the site or lot and its surrounding terrain.

(c) Unless otherwise approved by the Community Development Director, vegetation retention and revegetation shall be used in conjunction with riprapping.

11. Natural Areas

The intent of natural areas is to provide for retention of hillside areas in their natural state. The density and site disturbance shall be transferred to other portions of a site. Specific criteria for natural areas includes:

(a) Natural areas shall be at least one-half acre in size or immediately adjacent or contiguous to other land also designated as a natural area that, in the aggregate, totals at least one-half acre in size.

(b) Site disturbance other than hiking trails shall not be permitted within the geographical area of a natural area.

(c) The natural area shall be delineated in a surveyable manner on the tentative and final maps of a subdivision or on any development plan required for development other than a subdivision and shall be designated by legal description on a document recorded with the Clark County Recorder for lot division.

(d) Natural areas may be designated as a deed-restricted portion of a privately owned lot or as a separate parcel. Such parcel may be under the ownership of a property owners' association or deeded to any organization that accepts responsibility for the perpetual preservation and maintenance of the natural area, subject to approval and acceptance by the City. To protect the natural areas, covenants that run with the land shall be recorded in favor of the City and of all owners with record interest in the natural area. Any covenant for the deed-restricted portion of the natural area must be filed/recorded with the County Recorder before or concurrently with the filing/recording of the final map. Should civil improvement drawings reveal that land within the deed-restricted area will have to be disturbed, then the final map and deed restriction must be amended such that an equal or greater amount of deed-restricted area results from the amendment.

(e) Prior to issuance of a grading permit, natural areas must be identified with survey stakes.

(f) Disturbed areas that are restored shall not be considered as natural non-disturbed areas. Designated natural areas that are disturbed must be restored to their natural condition.

12. Wall Standards

The intent of wall standards is to reduce the visual impact of screening and retaining methods used on hillside developments. Specific criteria for design includes:

(a) The maximum combined height of retaining walls is 36 feet.

(1) Masonry walls for each six feet of vertical height, a six-foot horizontal offset shall be provided. (Figure 19.4.8-B.)

(2) Mortarless and groutless concrete masonry retaining walls for each 18-foot vertical maximum height a six-foot horizontal offset shall be provided. (Figure 19.4.8-C.)

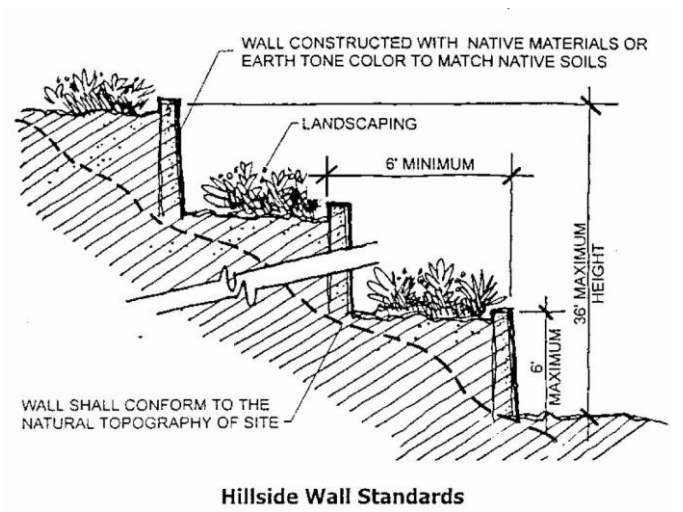

Figure 19.4.8-B: Masonry Walls

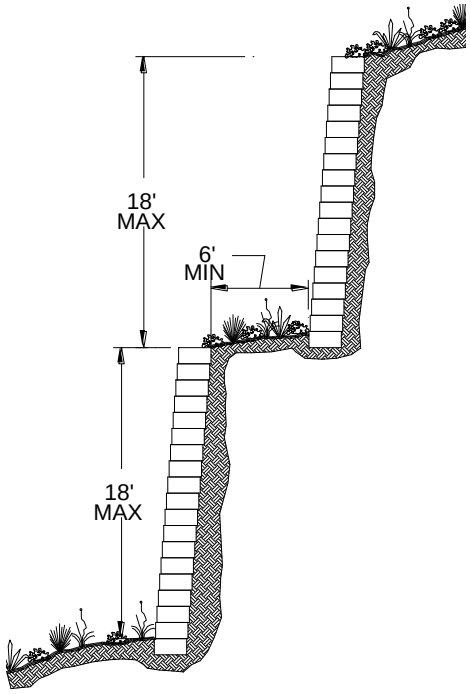

Figure 19.4.8-C: Mortarless and Rock Retaining Wall

(3) Rock wall for each 18-foot vertical maximum height a 6-foot horizontal offset shall be provided. (Figure 19.4.8-C.)

(4) A horizontal distance of 42 feet is required before another wall may begin unless otherwise approved through the Planned Unit Development (PUD) process.

(5) Offsets between walls must be sloped so that nuisance water flows do not overtop the wall.

(6) Offsets between the walls must be landscaped. Landscaping must be approved by the Community Development Director.

(b) Walls shall conform to the topography of the site.

(c) Walls with a change in alignment shall, to the greatest practical extent, incorporate the use of graduating steps rather than sharp corners.

(d) Walls shall either incorporate the use of native materials or be earth-tone colors to match the native soils. All rockery walls must be varnished unless it can be demonstrated to the satisfaction of the Community Development Director that revarnishing would not fulfill the intent of this subsection.

(e) The use of wrought iron or other similar open materials is encouraged for security walls, such as for pools.

(f) Perimeter walls shall be permitted around the entire lot or parcel.

(g) Perimeter walls shall not exceed a maximum height of 32 inches solid block and 40 inches wrought iron or a maximum of 72 inches wrought iron and no solid block.

13. Color

For land subdivided by a tentative map/planned unit development and final map, as well as multifamily, commercial, industrial, public and semipublic uses, development within sensitive ridgeline setbacks and zoning approvals granted in accordance with the MP overlay, all exposed exterior walls and roofs of structures, retaining walls, and accessory structures, except satellite dishes, shall be colored to blend with the overall character of the desert environment.

The intent of this requirement is that existing single-family lots and single-family lots created by parcel maps or tentative map (not planned unit development) and final map that are not within sensitive ridgeline setbacks be exempt from color requirements.

14. Building Materials

Reflective building materials (mirror finished glass and mirror finished doors) shall not be permitted.

15. Building Pad

Stepping floor elevations shall be utilized to avoid massive building forms and surfaces that contrast with the surrounding terrain. All single-family detached lots within the H overlay shall be exempt from the slope and grading standards in this Code as they relate to usable yard area.

16. Mechanical Equipment, Residential

All external mechanical equipment shall be ground-mounted and screened. Additionally, required vents shall be architecturally compatible with the structure.

17. Mechanical Equipment, Commercial and Industrial

All external mechanical equipment shall either be located in a mezzanine or ground-mounted and screened. Additionally, buildings utilizing a flat roof shall provide a parapet one foot above the highest required vent, and the vents shall be architecturally compatible with the structure.

18. Landscaping

These requirements shall apply to those areas outside of the designated revegetated areas in accordance with the hillside development plan. For land subdivided by a tentative map/planned unit development, as well as multifamily, commercial, industrial, public and semipublic uses, development within sensitive ridgeline setbacks, and zoning approvals granted in accordance with the MP or PUD overlay, landscaping within the hillside development area shall be as follows:

(a) Plant materials shall be those per the SNRPC Regional Plant List or as specified by the Community Development Director.

(b) Any installation of turf shall comply with HMC Title 14, and in no case shall turf areas violate applicable water conservation standards in effect at the time of development approval; additionally, turf areas shall be located within an enclosed area and not be visible from a lower elevation. Public or private parks and golf courses shall be exempt from this requirement.

(c) Golf courses shall be subject to the following landscaping criteria:

(1) A maximum of five acres of turf area per hole, to include a driving range, shall be permitted.

(2) Site disturbance shall be calculated based upon Table 19.4.8-1.

(3) Site disturbance may be transferred to areas of greater slope provided site disturbance in the higher slope area shall not exceed 50 percent.

(4) Cuts and fills shall be regulated per this Code.

(5) The intent of this requirement is that existing single-family lots and single-family lots created by parcel maps, a tentative map (not planned unit development), and a final map that are not located within sensitive ridgeline setbacks be exempt from landscaping requirements.

19. Improvements

All requirements and standards pertaining to public or private streets, driveways, drainage, sidewalks, curbs and gutters, curb cuts, water and fire hydrants, sewage, underground utility services, water supply, erosion control, and streetlighting shall be as prescribed by this Code.

(a) Water (Utility Services Department)

Except as noted, all water systems shall be designed in accordance with the Uniform Design and Construction Standards for Water Distribution Systems, Clark County, and the Uniform Standard Specifications for Public Works Construction, Clark County Area.

(b) Water (Fire Department)

(1) Water System Design Flow

The water mains and the distribution system shall be designed to deliver a minimum residual pressure of 20 pounds per square inch (psi) at the fire hydrants in service during maximum day demand plus the required fire flow demand. Minimum fire flow shall be as prescribed by the Fire Code. The system shall be designed in accordance with the requirements of the Department of Utility Services and the Fire Department, and assessed on a case-by-case basis. The system shall be designed to provide a minimum of 40 psi at the finish floor elevation of the structure during peak hour conditions without fire flow. A maximum pressure delivery at the point of service shall not exceed 120 psi.

(2) Building Fire Sprinkler Systems

All buildings shall be provided with an approved automatic fire sprinkler system in accordance with the Fire Code. The onsite private water system design shall accommodate the requirements for building fire sprinkler systems. The building fire sprinkler system shall meet City requirements, in addition to the Fire Code requirements. (Based upon steeper road grades, reduced roadway design speeds, reduced roadway width, longer dead-ends and cul-de-sacs, reduced water system design requirements, and relaxed secondary access requirements, the response

time for emergency vehicles is increased above that of conventional development patterns within the City. Given the increased response time, a waiver of the requirement for building sprinkler systems is subject to review and approval by the Fire Chief.)

(3) Water Main Sizes

Residential water main sizes shall be as required by the Department of Utility Services. If minimum fire-flow requirements are met, water main extensions may not be required to be looped.

(4) Fire Hydrant Branch Lines

Fire hydrant branch lines shall be set at right angles to street mains. The hydrant shall be set at the end of the branch line and shall face the branch. No horizontal or vertical bends or reducers shall be used in installing fire hydrant branch lines unless specifically approved by the City. Under no circumstances shall any size or manner of tap be made on a fire hydrant branch line.

(5) Fire Hydrant Location and Distribution

The number and spacing of fire hydrants shall meet the approval of the Fire Department.

(c) Wastewater Collection Treatment

Wastewater collection systems shall be designed in accordance with the latest edition of the Design and Construction Standards for Wastewater Collection Systems, Clark County.

(d) Drainage Design

Drainage facilities shall be designed to maintain the natural run-off characteristics to the maximum practical extent. In the event that rear- and side-lot drainage facilities are utilized, all such facilities shall be designed in accordance with the Clark County Regional Flood Control District Hydrologic Criteria and Drainage Design Manual. Private drainage facilities and easements shall be privately maintained.

(e) Roadways

(1) All roadways, public or private, shall be designed according to the standards of this ordinance, AASHTO requirements, and the approved traffic study. The standards are also intended to supplement the Public Works Department Plan Review Guidelines. Roadways should be located such that impacts to the natural environment are avoided. They should follow the topography of the area to minimize grading cuts and fills. Curvilinear horizontal alignments and gently rolling profiles consistent with the natural topography will minimize unnecessary site disturbance. Significant features, such as rock outcroppings, should be avoided.

(2) The standards in Table 19.4.8-3, Roadway Standards in the H Overlay, shall apply to roadways in the H overlay:

TABLE 19.4.8-3: ROADWAY STANDARDS IN THE H OVERLAY

ITEM #	FEATURE	REQUIRED STANDARD	
1	Right-of-way	42 feet (no parking or parking on side); see Figures 19.4.8-D & 19.4.8-E	
		45 feet (parking on both sides); see Figure 19.4.8-F	
2	Travel lanes	2	
3	Face-of-curb dimension	24 feet (no on-street parking)	
		28 feet (parking on one side)	
		36 feet (parking on both sides)	
4	Curbing	Curbing shall be required; curb type shall be as approved by the Public Works Director	
5	Design speed	20 miles per hour	
6	Stopping site distance	125 feet	
7	Site distance (intersections)	200 feet	
8 & 9	Minimum center line radius	180 feet without super-elevation	
		140 feet with 2 percent super-elevation	
10	Minimum vertical curve length	100 feet	
11	Maximum cross-slope in curve	4%	
12	Minimum grade	0.5% for L curb, 0.8% for rolled curb, unless otherwise approved by the Director of Public Works	
13	Maximum grade	15%	
14	Maximum grade length	Option A (within any given mile)	9% = 3,180 feet 9-12% = 1,400 feet 12-15% = 700 feet
		Option B	8% average, never to exceed 15%
15	Vertical clearance	13 feet 6 inches	
16	Sidewalks	Minimum lot sizes less than 20,000 sq. ft.: 4-foot walk on one side of the street	
		Minimum lot sizes greater than 20,000 sq. ft: none required	
17	Cul-de-sacs	Radius: 45 feet measured to the face-of-curb	
18	Vertical curves	Required if grade difference exceeds 1 percent	
19	Grade change	Maximum of 6% change over 25 feet	
20	Roadway aprons	2 percent maximum slope measured 4 feet from the back-of-curb on both sides of street	
21	Right-of-way slope	3 feet horizontal for 1 foot vertical behind the roadway apron and within the right-of-way	
22	Cross-slopes	4 percent	
23	Street lighting	Intersections and other locations for public safety as required by the Public Works Department	
24	Intersection spacing	200 feet, measured center line to center line	

(3) The following street cross section designs are allowed for interior subdivision streets in the H overlay:

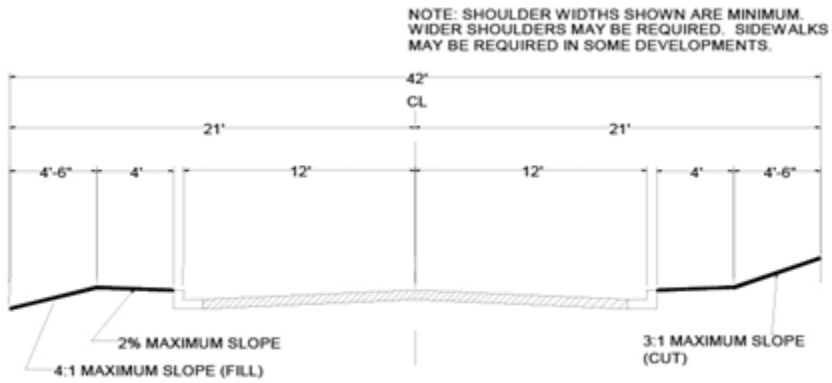

Figure 19.4.8-D: Road Configuration in H overlay with No On-Street Parking

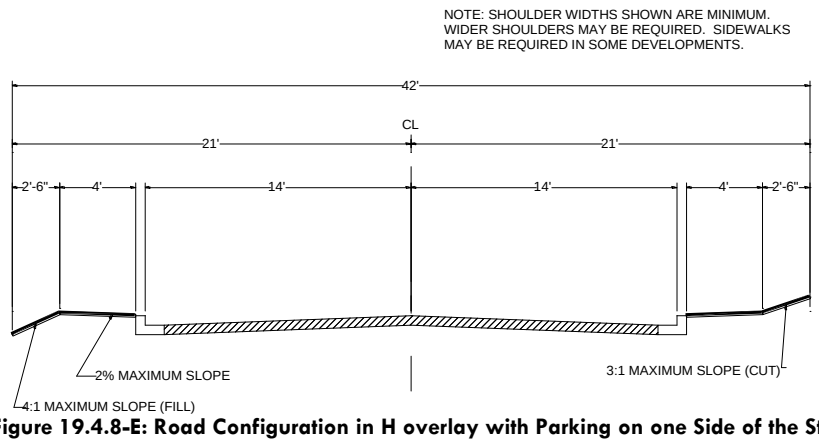

Figure 19.4.8-E: Road Configuration in H overlay with Parking on one Side of the Street (may only be used for single-loaded streets/streets with houses on only one side.)

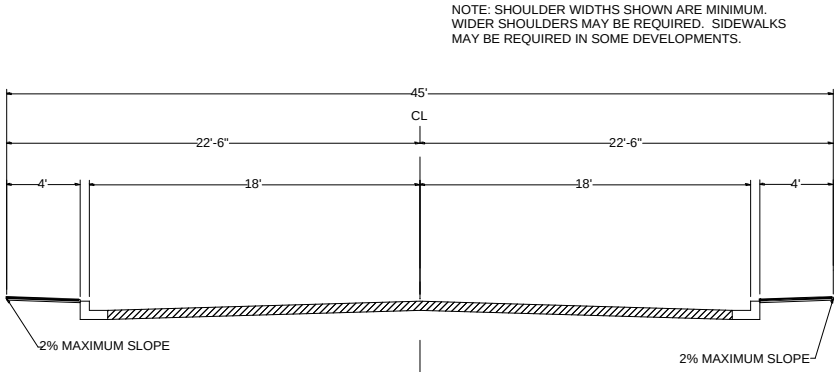

Figure 19.4.8-F: Road Configuration in H overlay with Parking on Both Sides of the Street

(f) Driveways

For the purposes of this section, driveways are private drives providing access from a roadway to a home or homes.

(1) A maximum of four homes are permitted per driveway.

(2) Additional driveways to a single residence, including circular driveways, may be permitted provided they do not adversely disrupt the surrounding environment, subject to Public Works Director approval.

(3) Driveways shall meet the criteria in Table 19.4.8-4, Driveway Configuration in the H Overlay:

TABLE 19.4.8-4: DRIVEWAY CONFIGURATION IN THE H OVERLAY

TYPE	MINIMUM WIDTH (FT)	MAXIMUM WIDTH (FT)	MAXIMUM GRADE (%)	SHOULDER WIDTH (FT)
Driveway serving a single residence	14	20	12	5 (both sides)
Driveway serving multiple residences	20	24		

(4) Driveways greater in length than 150 feet shall comply with the Fire Code and Fire Department guidelines for hillside driveways.

(5) Additional safety measures may be needed and will be reviewed on a case-by-case basis.

20. Homeowners' Association

Each hillside development plan that provides for private streets or improvements, common open space, perimeter landscaping, or natural areas shall establish and maintain a homeowners' association. The association shall be responsible for the maintenance and upkeep of all private streets and improvements as well as all common open space, perimeter landscaping, and natural areas.

21. Sensitive Ridgeline Development

(a) Sensitive Ridgeline Setback

All development, excluding perpendicular road crossings, is subject to a 100-foot setback from each sensitive ridgeline as depicted on the Hillside Regulation Map. The 100-foot setback is measured horizontally on each side of the center of the ridgeline unless taking advantage of exemption in Subsection (b). The applicant shall designate the sensitive ridgeline setback area as a natural area in accordance with Section 19.4.8.F.11, *Natural Areas*.

(b) Transfer of Development Outside Sensitive Ridgeline Setback

Hillside development plans that include property within a sensitive ridgeline setback are permitted transfer of density and site disturbance outside the area of a sensitive ridgeline setback.

(1) Calculate density and site disturbance per Section 19.4.8.F.1, Density Allocation and Maximum Site Disturbance, for the area within the sensitive ridgeline setback.

(2) Transfer all density and site disturbance outside the sensitive ridgeline setback.

(3) Designate the sensitive ridgeline setback area as a natural area in accordance with Section 19.4.8.F.11, Natural Areas.

(4) All transfers must occur within the subject property. Transfers cannot be to any other property that is not a part of a hillside development plan.

(c) Development Within Sensitive Ridgeline Setback

Residential development on pre existing lots of record created on or before July 1, 1997, not being further subdivided are subject to the following:

(1) Split-pad design shall be utilized.

(2) Maximum height shall not exceed 25 feet.

(3) Building material color to include walls shall match the natural colors found on the lot or parcel.

(4) The slope of all roofs shall be the same as the natural slope of the property.

22. Findings of Fact

In approving any development proposal that includes waivers, the Planning Commision or City Council must find that the proposed project:

(a) Preserves the integrity of and locates development within the least impact upon sensitive peaks and ridges, or any other significant topographical feature designated on the existing conditions report per Section 19.4.8.D.2(b).

(b) Minimizes grading and site disturbance.

(c) Locates development compatibly with the natural terrain.

(d) Provides for adequate drainage, protects downstream properties, and minimizes erosion.

(e) Provides for development standards in excess or equal to those required by this ordinance.

These findings are in addition to any other applicable findings required by this Code.

23. Application Requirements

Each application for approval of a hillside development plan shall be initiated by all property owners or their authorized agent. The form of the application and submittal requirements including additional submittal requirements required by the hillside checklist shall be as established by the Community Development Director.

24. Amendment

(a) Any request for amendment to an approved hillside development plan that increases the number of dwelling units, decreases or relocates common open space or natural areas, alters lot lines or road patterns, changes the types of structures, increases the building area or results in a request for new waivers shall be initiated and processed as a new application.

(b) Minor amendments, including revisions to site plans or architecture proposed in response to conditions of approval, shall be approved administratively in accordance with Section 19.6.9.B, Administrative Adjustments.

(c) An application to approve additional area or annexation of property with a slope in excess of 15 percent in the H overlay shall be initiated by the Community Development Director or by property owners or an authorized agent. If the property is not under a single ownership and all owners agree to the proposed development, then all owners shall join the application. A map showing the extent of ownership and the proposed area for inclusion within the H overlay shall be submitted with the application. Procedures for an amendment shall be initiated in the same manner as a new application for zoning.

25. Expiration and Renewal

(a) In order to maintain consistency with City development timing objectives, including but not limited to the Capital Improvement Program, hillside development plans are required to be implemented and constructed within a reasonable time from approval.

(b) Approval of a hillside development plan may be renewed and the expiration date extended by a time period equal to or less than the initial approval period. Requests for renewal shall be made in writing by the applicant prior to expiration. At the discretion of the City Council, any extension approval may include additional restrictions or approval conditions including but not limited to changes in development regulations adopted after the initial approval.

26. Exemptions

(a) Any approved MP as defined by Section 19.6.4.D, and any subdivision, as defined by NRS 278.320, that lies within all or part of the H overlay and has received City Council approval of development standards for the entire master plan through a zoning action or has tentative and final maps approved prior to enactment of this Code may be developed in compliance with the conditions and waivers as approved without regard for this Code.

(b) Any application to rezone property within a master plan, to resubdivide or to amend a tentative map shall comply with all provisions of the hillside regulations in effect at that time provided, however, that any application to rezone any property within a master plan, to resubdivide, or to amend a tentative map may include:

(1) A request that the approved development standards of the master plan or approved tentative map conditions be applicable to the property sought to be rezoned upon rezoning; or

(2) A request that amended development standards be applicable to the property upon rezoning or amendment. If amended development standards are requested to be applicable to the property to be rezoned, resubdivided or amended, then the findings of fact requirements set forth in Section 19.4.9.F.25, Expiration and Renewal, shall apply.

19.4.9. SENSITIVE LANDS OVERLAY (SL)

A. PURPOSE

It is the purpose and intent of the Sensitive Lands Overlay (SL) to protect and enhance the visual and environmental quality of designated areas such as, but not limited to, the area referred to as the Sloan Canyon National Conservation Area Gateway. More specifically, to ensure that:

1. Sites are developed with due regard to protecting the environmental qualities of the natural terrain and landscape including protection of native vegetation, wildlife habitat, and riparian areas, and that land disturbance is kept to a minimum to preserve and enhance the natural resources and visual quality of a site;

2. Development avoids natural hazard areas;

3. Structures, including roads, do not block or intrude adversely into significant views to and from the site. The scenic quality of the desert and mountain environment is preserved by designing structures and roads to be compatible with the natural topography;

4. Development is properly related to its site and surrounding landscape, and structures are compatible with their surroundings;

5. Natural open space, landscaping, parking, and other site features are designed to enhance the visual and physical use of the property and to screen visually intrusive uses;

6. Natural drainage channels are integrated into a system of protected, multiple purpose natural open space;

7. Multi-jurisdictional, regional planning, and collaboration are pursued to enhance the visual and physical use of the property as well as to ensure the safety of residents and visitors;

8. Development is oriented to maximize visibility and accessibility by minimizing the use of walls, fronting natural open space with streets, trails, parks, and/or other public places; and

9. Development shall be consistent with principles in the City's Comprehensive Plan, including but not limited to providing: a balance of nonresidential and residential uses; unique building characteristics to promote variety; internal and external connectivity through streets, sidewalks and trails as well as within subdivisions; integrated natural open spaces and natural features within built places; landscaping that reflects the desert environment; energy efficiency in building design to conserve resources; as well as other applicable principles.

B. CONFLICTING PROVISIONS

If the provisions of this section are inconsistent with the provisions found in another section of this Code, the provisions of this section shall apply.

C. APPLICABILITY AND ZONING MAP DESIGNATOR

1. The standards in this section shall apply to all lands and proposed development located within any area designated a SL overlay.

2. Each SL overlay shall be shown on the zoning map of the City by adding a symbol to indicate the overlay zoning and shall be shown in written form by adding a "-SL" designator to the base district designation.

D. DESIGNATION OF SENSITIVE LANDS OVERLAY

1. The SL overlay shall be established in accordance with the rezoning procedures of Section 19.6.4.C, as modified by the standards and procedures of this section.

2. Upon its own initiative or upon recommendation by the Planning Commission, the City Council may, in addition to any existing base district, apply the SL overlay to any area or property. In designating such area, the City Council shall enumerate the significant natural and visual attributes justifying such designation and apply standards, uses, and densities pursuant to the procedures set forth in this section.

3. Designation as a SL overlay may be required as a condition for approving any request for a rezoning, conditional use permit, planned unit development, master plan, or any discretionary land use development application.

4. If requested by the applicant, a zoning map amendment to the SL overlay and promulgation of standards, uses, and densities may be processed simultaneously with other forms of required development approvals, as set forth in Section 19.6.3.B.8, Simultaneous Processing.

E. ESTABLISHMENT OF REVIEW STANDARDS, USES, AND DENSITIES

1. Prior to designation of an area or property as a SL overlay, the City Council shall direct the Community Development Director to undertake such studies as are necessary to establish development review standards, appropriate uses, and densities for the overlay. These standards, uses, and densities shall be in keeping with the purposes set forth in this section and necessary to protect the significant natural and visual attributes of the overlay enumerated by the Planning Commission or City Council in proposing the overlay. Such studies may include, but are not limited to, environmental, traffic, design, and visual analyses.

2. The Community Development Director shall, based on such studies, propose the boundaries of the overlay, development review standards, and a list of appropriate uses and densities of development. Such standards may address all aspects of development necessary to achieve the purposes of this section and to protect the significant natural and visual attributes of the overlay including but not limited to:

(a) Building design including, but not limited to, materials, colors, architectural detail, massing, and other exterior design features of any structure;

(b) Dimensional attributes of structures including height limits and setbacks;

(c) The location of structures on a site;

(d) Landscaping;

(e) Means of illumination;

(f) Fencing, screening, and buffering;

(g) Vegetation protection;

(h) Accessibility and circulation;

(i) Minimization of grading activities;

(j) Establishment of protected, natural open space;

(k) Storm drainage and trails; and

(l) Signage and gateway community features.

3. The Planning Commission shall review such proposed overlay boundaries, design standards, uses, and densities and make a recommendation to City Council for final approval simultaneous with designation of a SL.

F. DEVELOPMENT REVIEW PROCEDURES

Any application for development in a SL overlay shall comply with the required study referenced in this section or any applicable development agreement.

19.4.10. RURAL NEIGHBORHOOD OVERLAY (RN)

A. PURPOSE

The intent of this section is to preserve the rural character of the designated rural neighborhoods by identifying and maintaining the density unique to each of the rural neighborhoods in the city that have some or all of the following characteristics:

1. Populated by residents with common interests in more open-space lifestyles than experienced in urban neighborhoods;

2. Custom-built homes;

3. No mandatory Conditions, Covenants, and Restrictions (CC&Rs) or homeowners' associations;

4. Suitable for keeping and riding horses in a rural residential setting;

5. Trail access to mountainous areas surrounding the city;

6. Residential lots large enough to park boats, horse trailers, and other recreational vehicles behind the front setback line and having enough rear-yard area to construct accessory buildings, stables, tack houses, and other horse-related outbuildings;

7. Residential densities low enough to allow substantially more physical separation between neighboring dwellings than typically found in urbanized areas;

8. Modified pavement sections and few public streetlights and sidewalks; and

9. Less light pollution from fewer residential nighttime activities and house lighting in general.

B. APPLICABILITY AND ZONING MAP DESIGNATOR

1. The RN overlay may only be combined with the DH, PS, RS-1, and RS-2 districts.

2. Each RN overlay shall be shown on the zoning map of the City by adding a symbol to indicate the overlay zoning and shall be shown in written form by adding a designator "-RN" to the base district designation. All development must be consistent with the provisions of this Code.

C. AMENDMENT

An application to establish or amend a RN overlay shall be initiated by a property owner or authorized agent, or by the City. For applications not initiated by the City, and if the properties to be added or removed are not under single ownership, all individual owners must join and sign the application before submittal to the City. A map showing the extent of ownership shall be submitted with each application. The application shall adhere to the following standards:

1. Each RN overlay shall be a minimum affected area of 160 acres or greater and shall include a state-designated rural neighborhood within its boundaries. Exceptions to the size may be as approved by City Council.

2. Each application shall be in accordance with the purposes of this section.

3. An amendment shall not segment, divide, or create a non-RN island within the RN.

4. All applications shall show the limits of "Rural Preservation" as defined by state statute. Applications may include more area than that defined by state statute.

5. Applicants requesting amendments to the RN overlay shall demonstrate that the amendment mitigates any potential significant adverse impacts to the rural neighborhood and the city to the maximum practical extent.

6. Undeveloped lands outside Henderson corporate boundaries but adjacent to a rural neighborhood as designated by the City shall be subject to the provisions of this section upon annexation.

7. Applicants shall hold a neighborhood meeting before applying for a zone change from the City. The meeting shall be conducted at a nearby public facility such as a school, public library, or similar public meeting place. The applicant shall comply with the notification standards set forth in Section 19.6.3.B.4, Public Notice.

D. UNDERLYING ZONING DISTRICTS

1. Applications for zoning districts other than DH, RS-1, RS-2, or PS shall require removal of the RN overlay.

2. Applicants requesting to amend the underlying zoning districts on land designated as RN shall have the burden of demonstrating that the zone change will not have significant adverse impacts on other property in the vicinity of the subject amendment.

E. OVERLAY-SPECIFIC STANDARDS

The intent of this section is to preserve the rural character of the designated rural neighborhoods by not requiring sidewalks, streetlights, curbs, or gutters on residential streets. The Public Works Director shall retain the authority to modify these standards where conditions require. Except as otherwise stated in this section, land use regulations shall be those of the base zoning district and the following:

1. Streets

All streets shall conform to the adopted Master Streets and Highways Plan. Intersections with designated rural roads with modified street sections shall comply with Public Works' specifications. For streets not listed on the adopted Master Streets and Highways Plan, unless full dedication was accepted prior to adoption of this ordinance, the right-of-way on each residential street shall be maintained at 60-foot width, and the improvements therein shall be as follows:

(a) Each street shall have a pavement width of a minimum of 32 feet as measured 16 feet respectively on either side of the centerline of the right-of-way;

(b) The remaining right-of-way on either side shall be reserved for equestrian and trail use;

(c) Revocable or other use permits may be granted in the right-of-way on either side of the pavement;

(d) Sidewalks shall not be required in the remaining right-of-way; and

(e) Streetlights shall not be required.

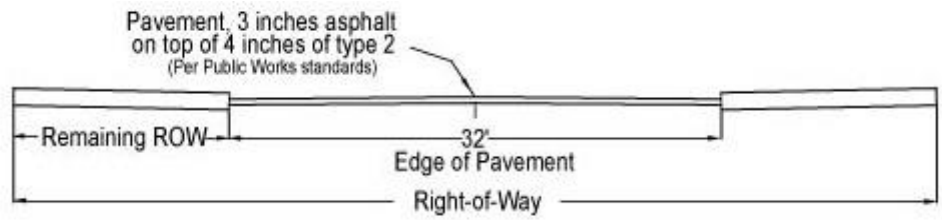

Figure 19.4.10-A: Rural Street Cross-Section

2. Trails

(a) Connectivity and accessibility between trail systems within rural neighborhoods and consideration for trailhead sites is encouraged.

(b) Trailheads shall be located in a manner that will direct vehicular traffic onto arterial roadways rather than imposing on rural neighborhood streets.

F. EXCEPTIONS

1. If a conflict occurs between the provisions set forth in this section and an approved neighborhood plan as defined by the Comprehensive Plan, the neighborhood plan shall control.

2. According to the provisions of NRS Section 278.251, the state regulations necessary to maintain the rural character of neighborhoods shall expire on June 1, 2004. Thereafter, the regulations in the RN shall control.